RoHS | GP | HF

REV.	ECR/N NO.	DESCRIPTION	DRAWN	DATE
A	/	NEW	HaiXiang	2017/05/24

Model No.	Audio Jack
Schematic	#3, #1, #5, #6, #2, #4

□:Terminal No.

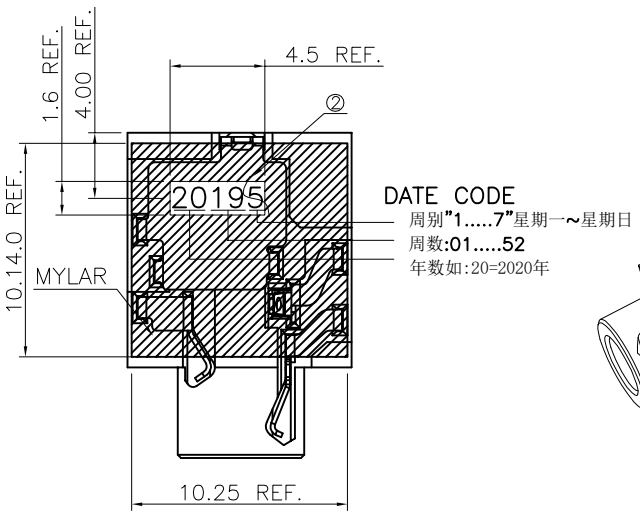

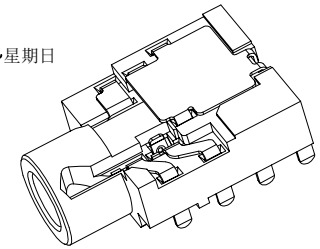

Specification:
1.Rating : DC 30V 0.5A;
2.Contact resistance: ≤30mΩ;
3.Insulation resistance: ≥100MΩ (500VDC);
4.Withstand voltage: 500VAC;
5.Insertion and extraction force: 5N~30N;
6.life test: 5000cycles min;

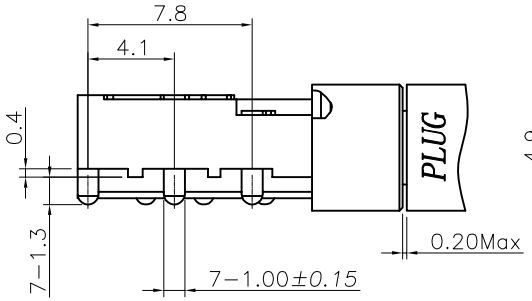

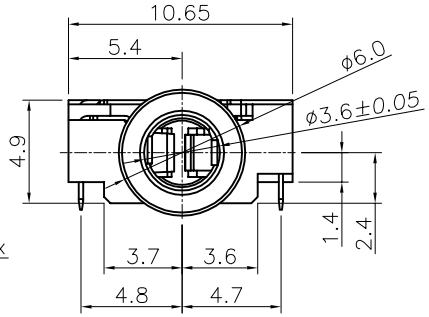

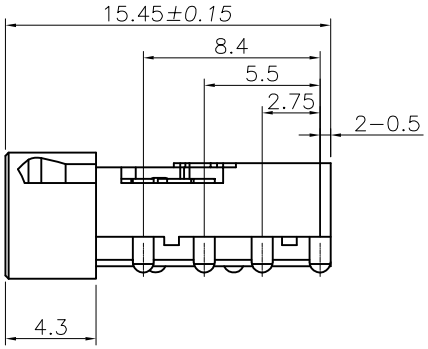

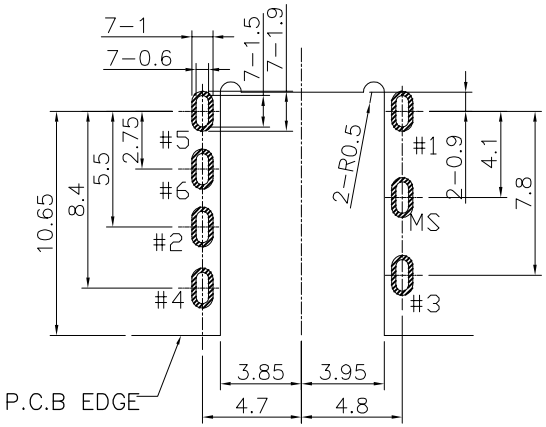

PCB LAYOUT
TOP VIEW (Tolerance:±0.05)

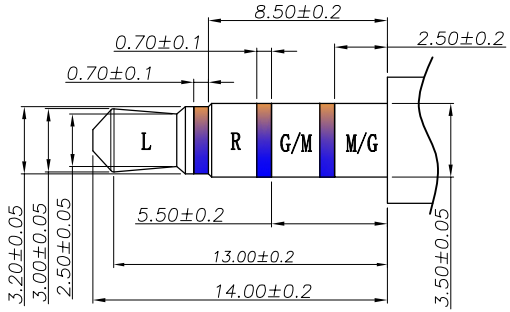

RECOMMENDED PLUG
4-POLE

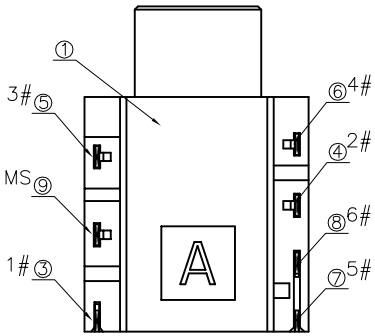

NO.	DESCRIPTION	QTY	MATERIAL	REMARK
⑨	Shell	1	C2680 0.20t	Nickel 50u" Min
⑧	6#-TERMINAL	1	C5191 0.20t	GOLD FLASH (1u") ON CONTACT AREA ; MATT TIN 60u"ON SOLDER, ALL OVER 40u" NI.
⑦	5#-TERMINAL	1	C5191 0.20t	
③	1#-TERMINAL	1	C5191 0.20t	
⑤	3#-TERMINAL	1	C5191 0.20t	
④	2#-TERMINAL	1	C5191 0.20t	
⑥	4#-TERMINAL	1	C5191 0.20t	
②	SEPARATOR	1	PA6T HF, UL-94V0	Black
①	HOUSING	1	PA6T HF, UL-94V0	Black

TOLERANCE	MODEL NAME: ¢3.5mm耳机座 沉板CH=1.4 CKX-3.5-179N PA6T黑色无卤 贴MYLAR 载带真空包装			DRAWN: DENGJU
X.X ±0.35	MODEL NO: WLPN-114B			CHECKED: WUXIAOTAO
X.XX ±0.25	UNIT:	SCALE:	REVISION: / SHEET	APPROVED: WUHUAMING
X.XXX ±0.10	mm	1:1	B / 1/1	DATE: 2020/05/24
ANGLE ±1.0°	WLCO 深圳市兴万联电子有限公司 SHENZHEN XING WAN LIAN ELECTRONICS CO.,LTD.			DWG NO:
				FILE: C